SAEROK · playsaerok.com

Christmas & Winter Brain Activities

Word search · colour by number · mazes · sudoku

Do one page a day. All the answers are at the back.

Word Search

Theme Christmas

Name _____ Date _____

Find the words below in the grid and circle them. Across, down and diagonally.

STAR | SLEIGH | ANGEL | WREATH | BELL | REINDEER

O	S	W	B	E	L	L	L
S	T	S	R	N	I	C	E
H	A	T	L	E	A	P	S
A	R	O	A	J	A	E	S
A	I	H	N	Y	A	T	N
A	N	G	E	L	X	K	H
E	U	S	L	E	I	G	H
R	E	I	N	D	E	E	R

Colour by Number

Christmas tree

Name _____ Date _____

Look at the number in each area and colour it using the key below.

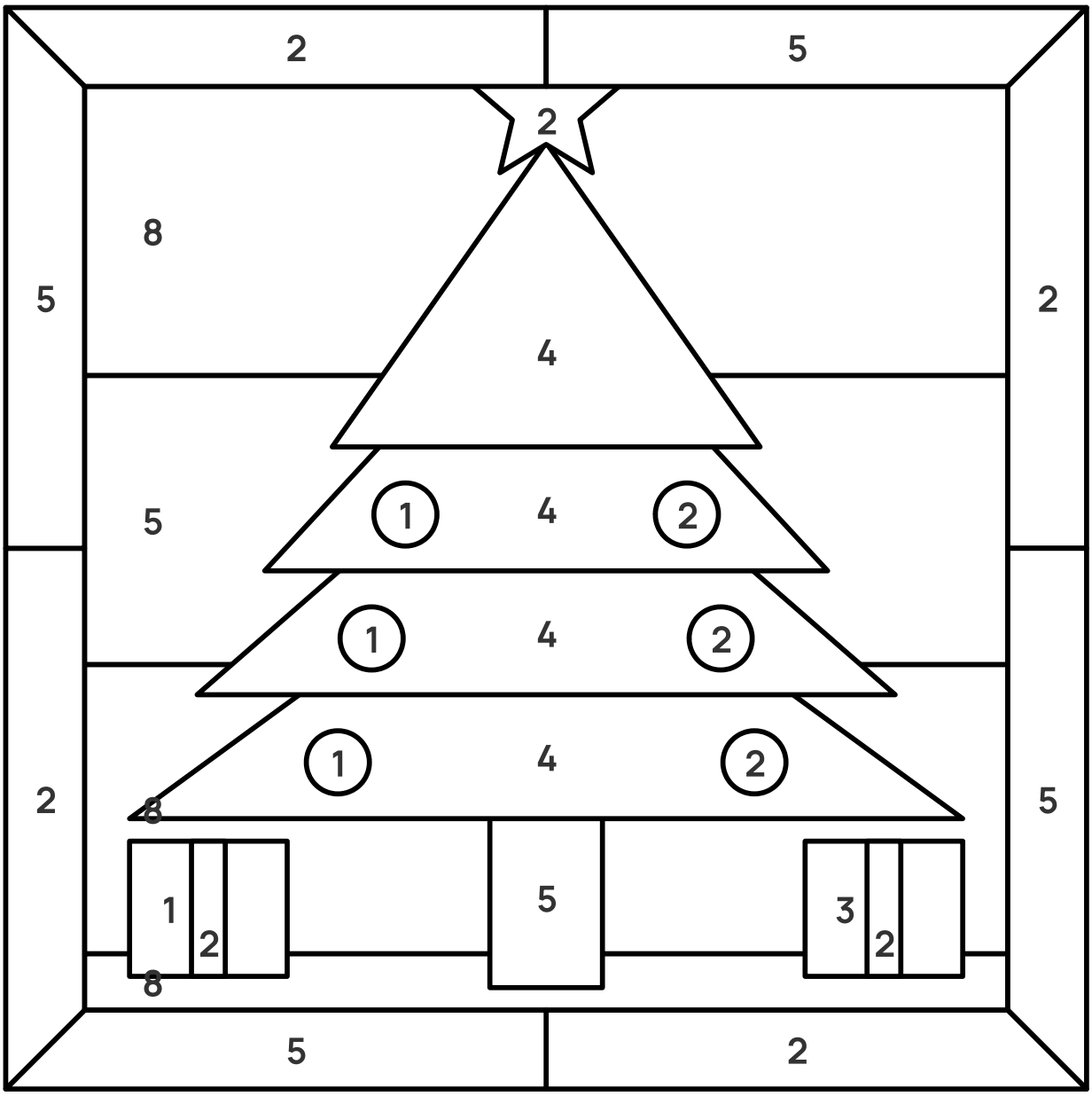

1:Red 2:Yellow 3:Blue 4:Green 5:Orange 8:Sky

Word Search

Theme Winter

Name _____ Date _____

Find the words below in the grid and circle them. Across, down and diagonally.

ICE | IGLOO | BOOTS | SCARF | COCOA | BLANKET

S	P	I	C	I	E	R	B
C	B	M	O	G	E	T	O
A	L	E	C	L	E	E	O
R	A	Z	O	O	N	T	T
F	N	T	A	O	I	C	S
O	K	T	I	C	E	I	Q
L	E	G	D	Z	L	N	I
W	T	R	T	R	S	D	G

Colour by Number

Gift box

Name _____ Date _____

Look at the number in each area and colour it using the key below.

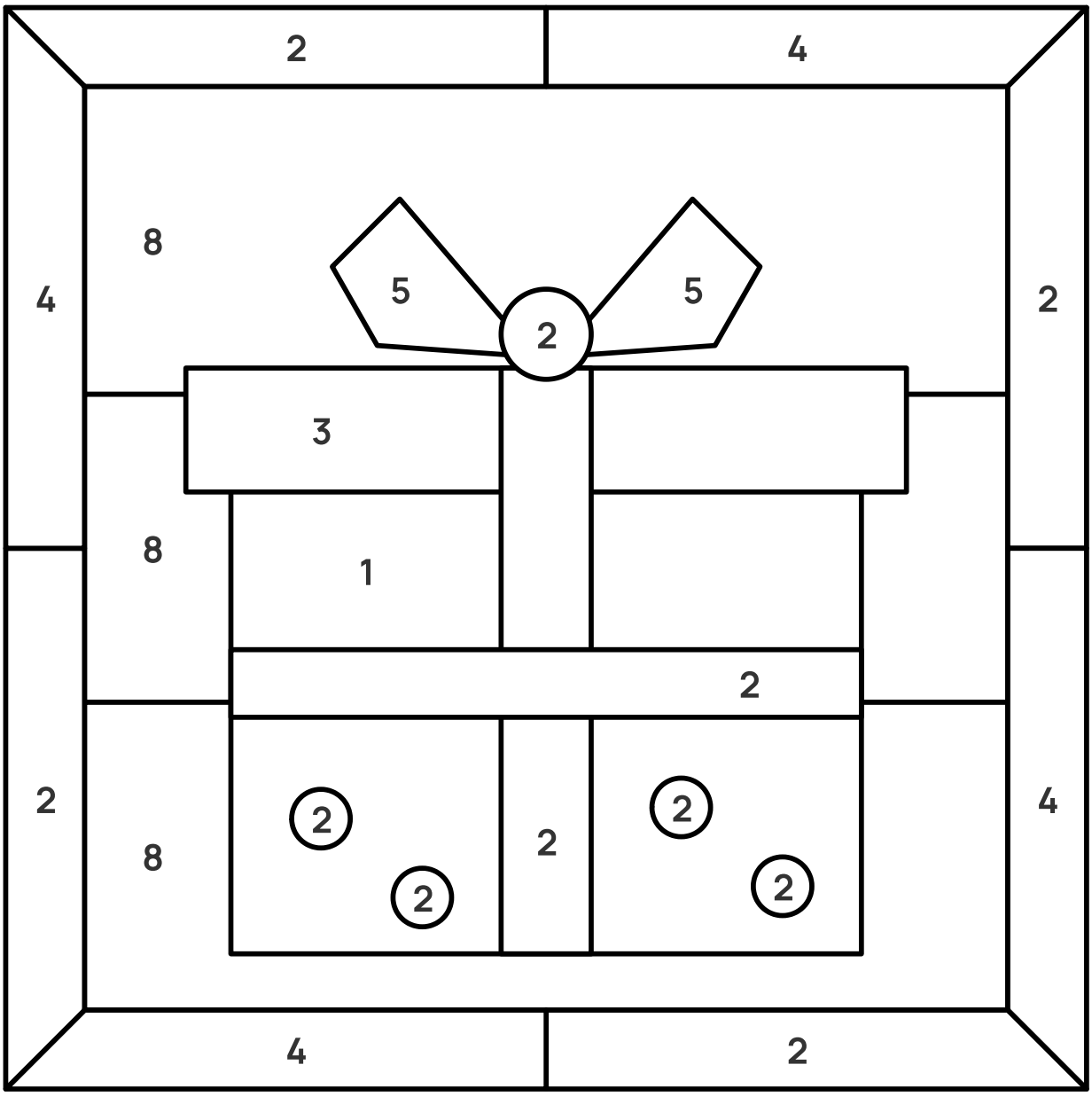

1:Red 2:Yellow 3:Blue 4:Green 5:Orange 8:Sky

Maze

Level 3 Easy

Name _____ Date _____

Start at the top left and draw a pencil line to the ringed square at the bottom right.

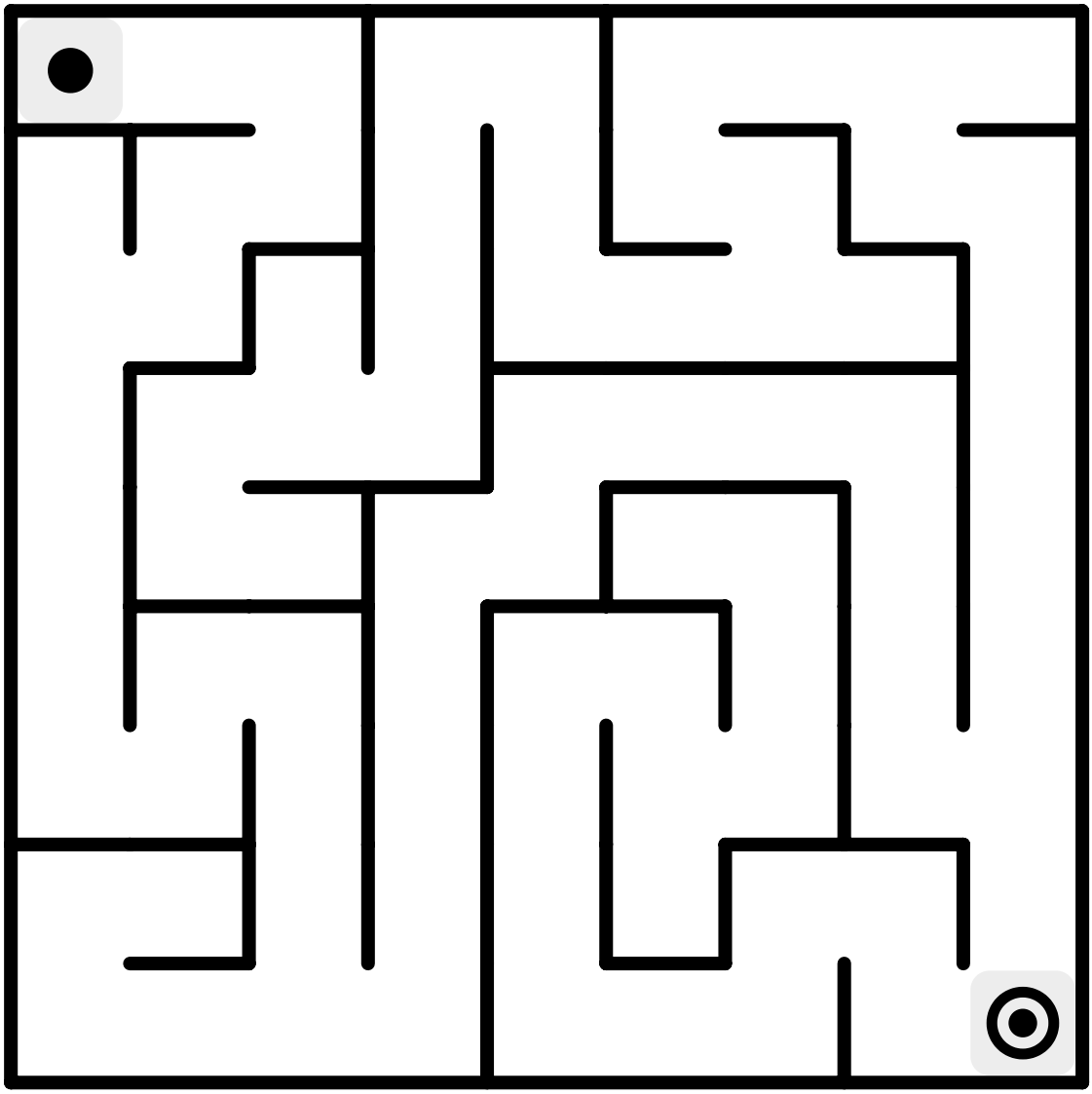

Colour by Number

Snowman

Name _____ Date _____

Look at the number in each area and colour it using the key below.

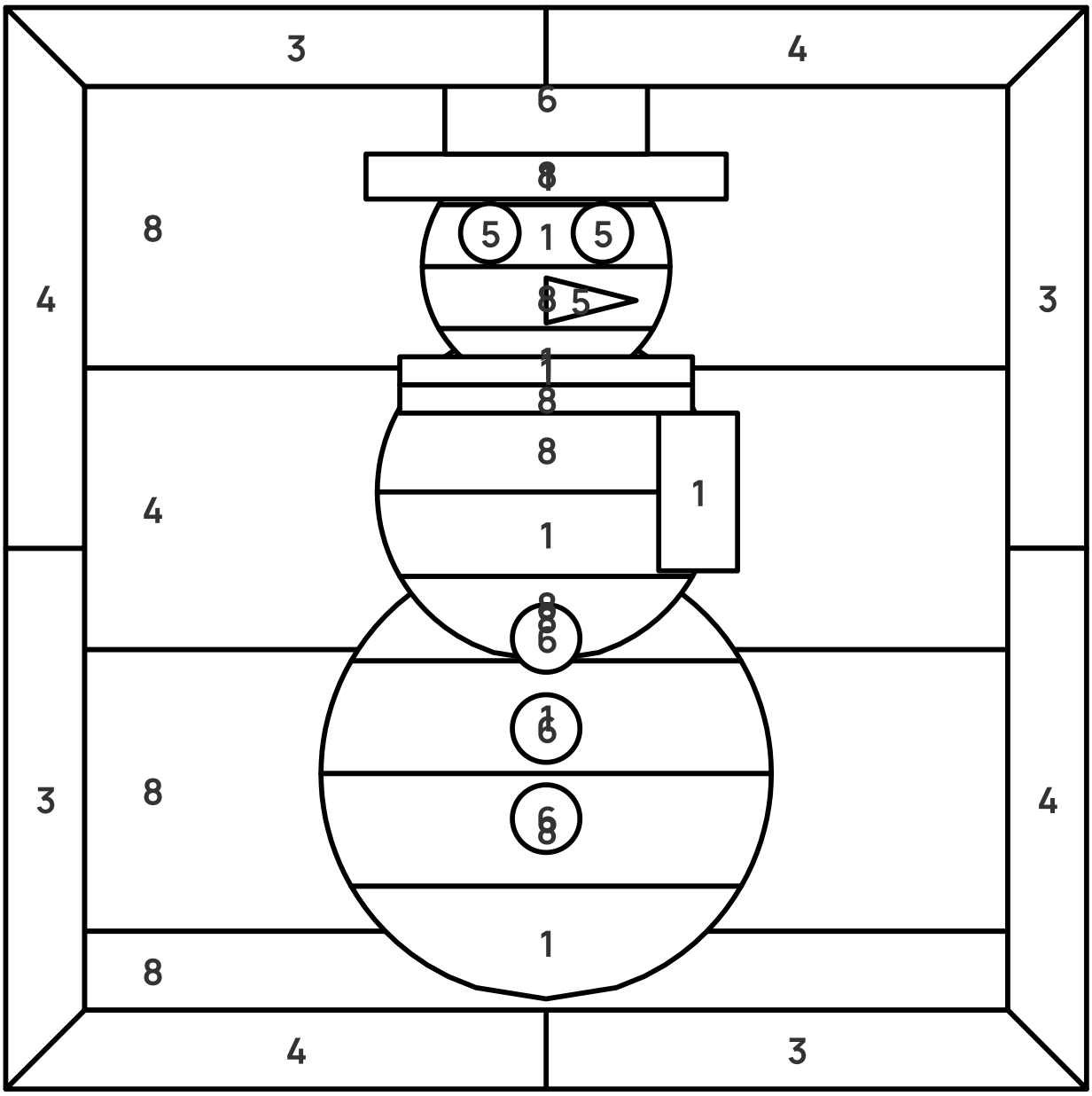

1:Red 3:Blue 4:Green 5:Orange 6:Purple 8:Sky

Word Search

Theme Christmas

Name _____ Date _____

Find the words below in the grid and circle them. Across, down and diagonally.

BOW | CAROL | SLEIGH | WREATH | STAR | ANGEL | STOCKING | GIFT

D	T	N	O	F	E	E	T	N	M
L	O	R	A	C	S	S	A	R	A
S	T	T	F	I	G	T	R	N	T
T	E	S	O	O	A	M	A	N	D
O	B	D	L	W	H	M	I	R	F
C	O	O	H	E	R	H	Y	L	G
K	A	D	W	E	I	E	E	D	L
I	L	Y	U	S	R	G	A	D	H
N	E	E	L	N	N	C	H	T	E
G	O	B	A	A	E	A	S	T	H

Sudoku

Level 3 Easy

Name _____ Date _____

Each row, each column and each bold box holds 1 to 9, once each.

		3	1			5	4	
5				3	9			
	1	8		2			9	
6		5	9	7	8		3	1
3						4	5	8
	2		3	5			7	9
2	3	6	7	9		1		4
1	5		8	6	3	9	2	
		9		4	1	3		

Colour by Number

Christmas Wreath

Name _____ Date _____

Look at the number in each area and colour it using the key below.

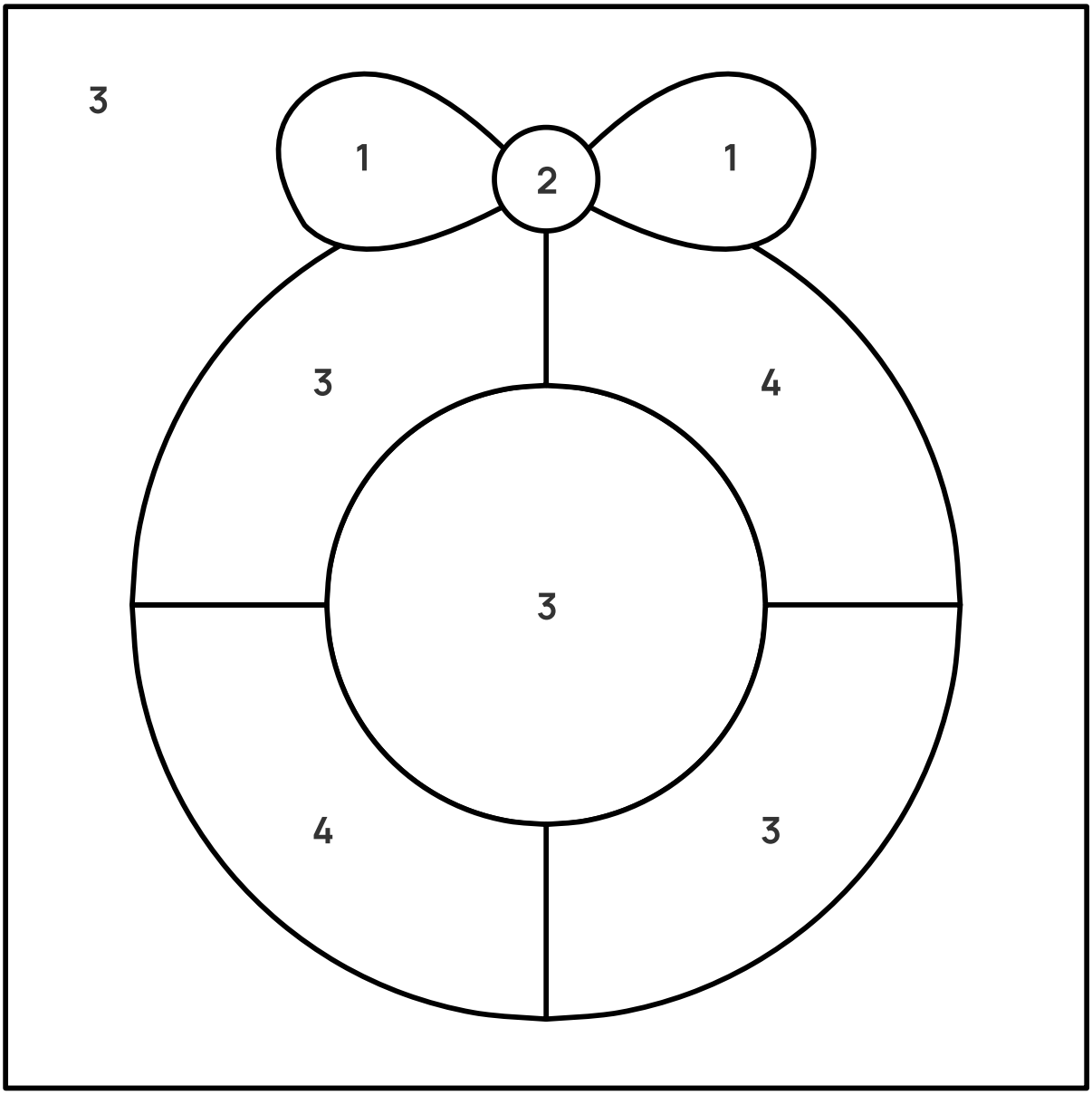

1:Red 2:Yellow 3:Blue 4:Green

Colour by Number

Christmas Bells

Name _____ Date _____

Look at the number in each area and colour it using the key below.

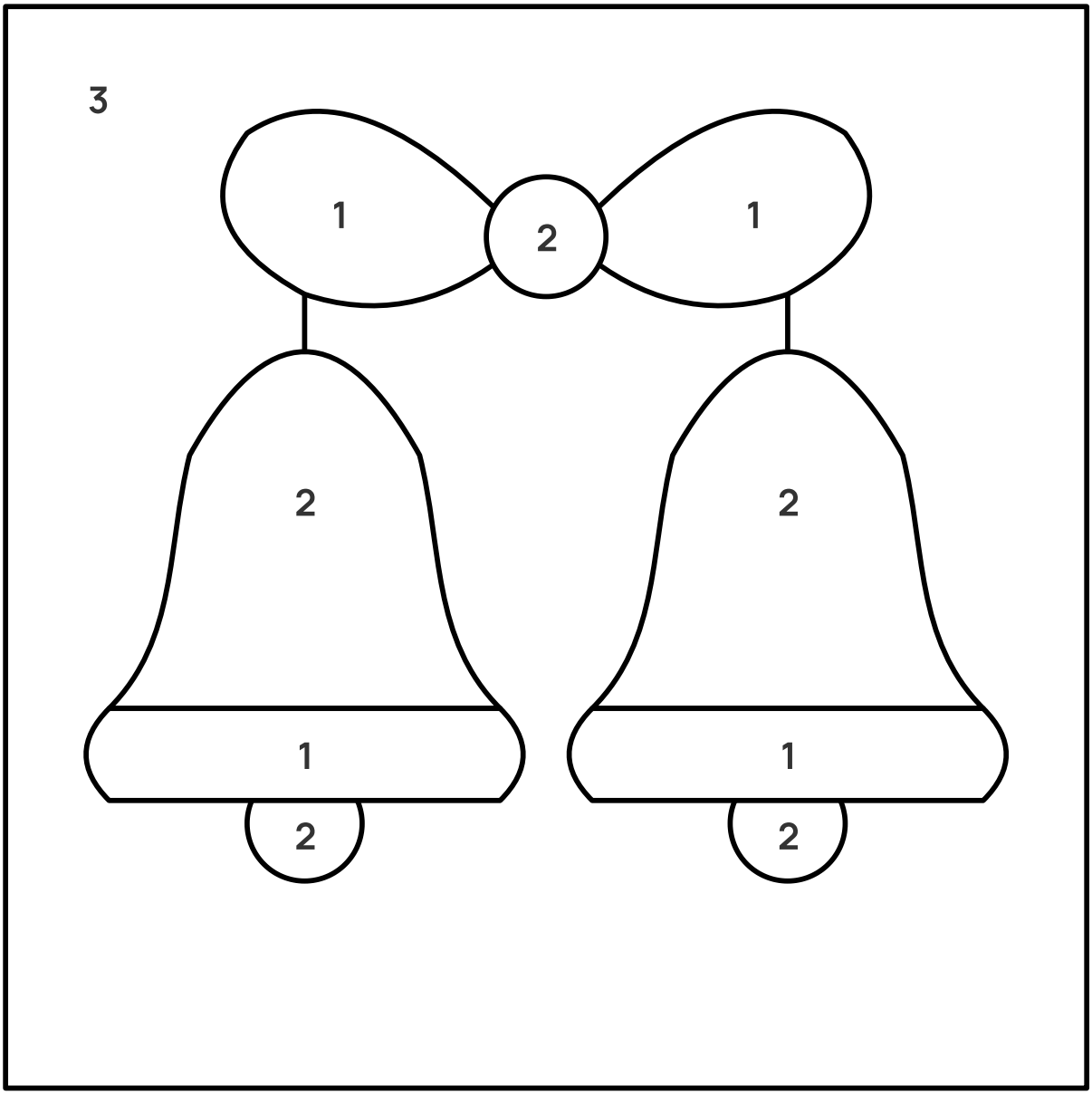

1:Red 2:Yellow 3:Blue

Word Search — answers

Theme Christmas

Name _____ Date _____

STAR | SLEIGH | ANGEL | WREATH | BELL | REINDEER

O	S	W	B	E	L	L	L
S	T	S	R	N	I	C	E
H	A	T	L	E	A	P	S
A	R	O	A	J	A	E	S
A	I	H	N	Y	A	T	N
A	N	G	E	L	X	K	H
E	U	S	L	E	I	G	H
R	E	I	N	D	E	E	R

Finished example

Christmas tree

Name _____ Date _____

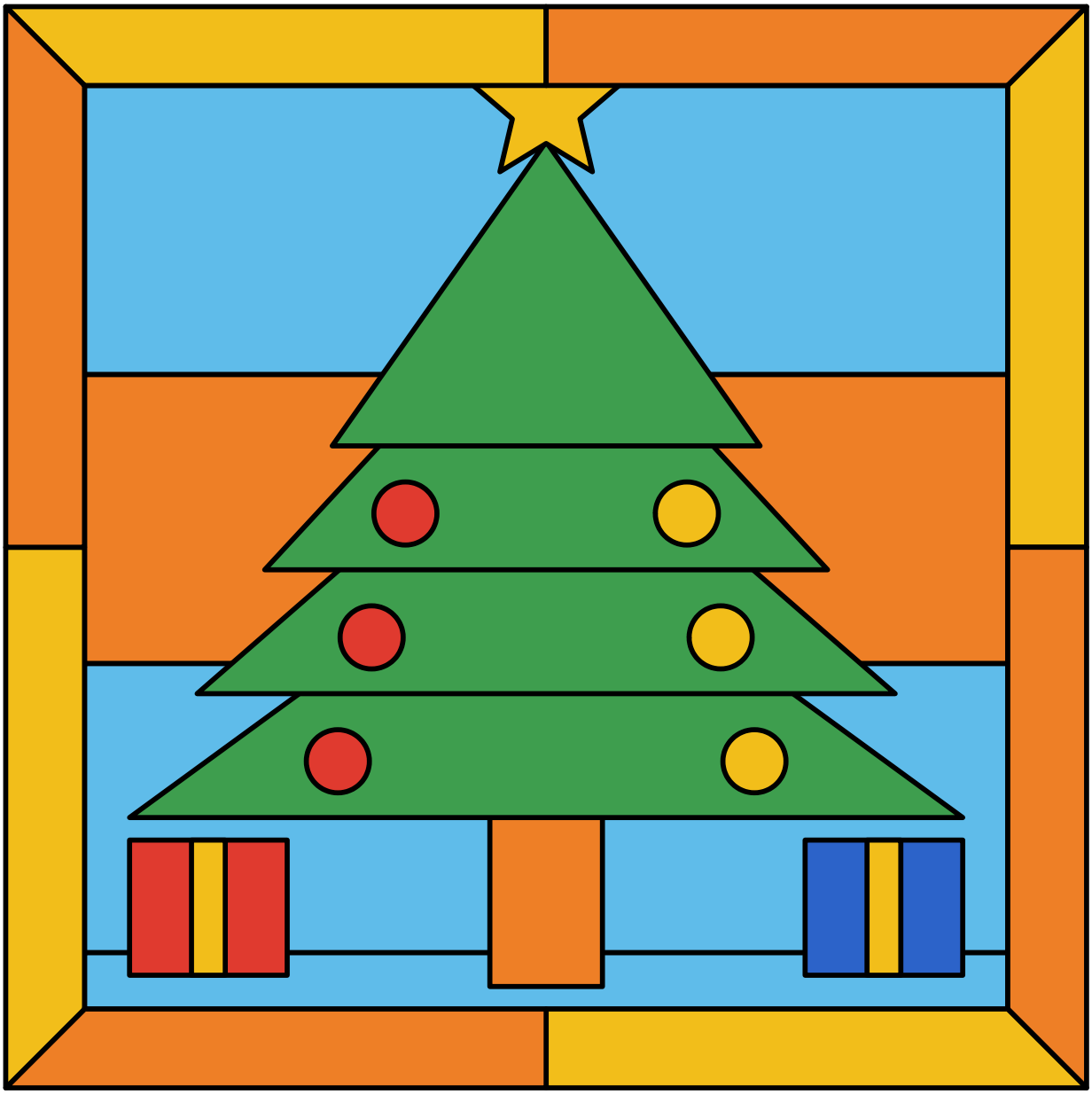

Word Search — answers

Theme Winter

Name _____ Date _____

ICE | IGLOO | BOOTS | SCARF | COCOA | BLANKET

S	P	I	C	I	E	R	B
C	B	M	O	G	E	T	O
A	L	E	C	L	E	E	O
R	A	Z	O	O	N	T	T
F	N	T	A	O	I	C	S
O	K	T	I	C	E	I	Q
L	E	G	D	Z	L	N	I
W	T	R	T	R	S	D	G

Finished example

Gift box

Name _____ Date _____

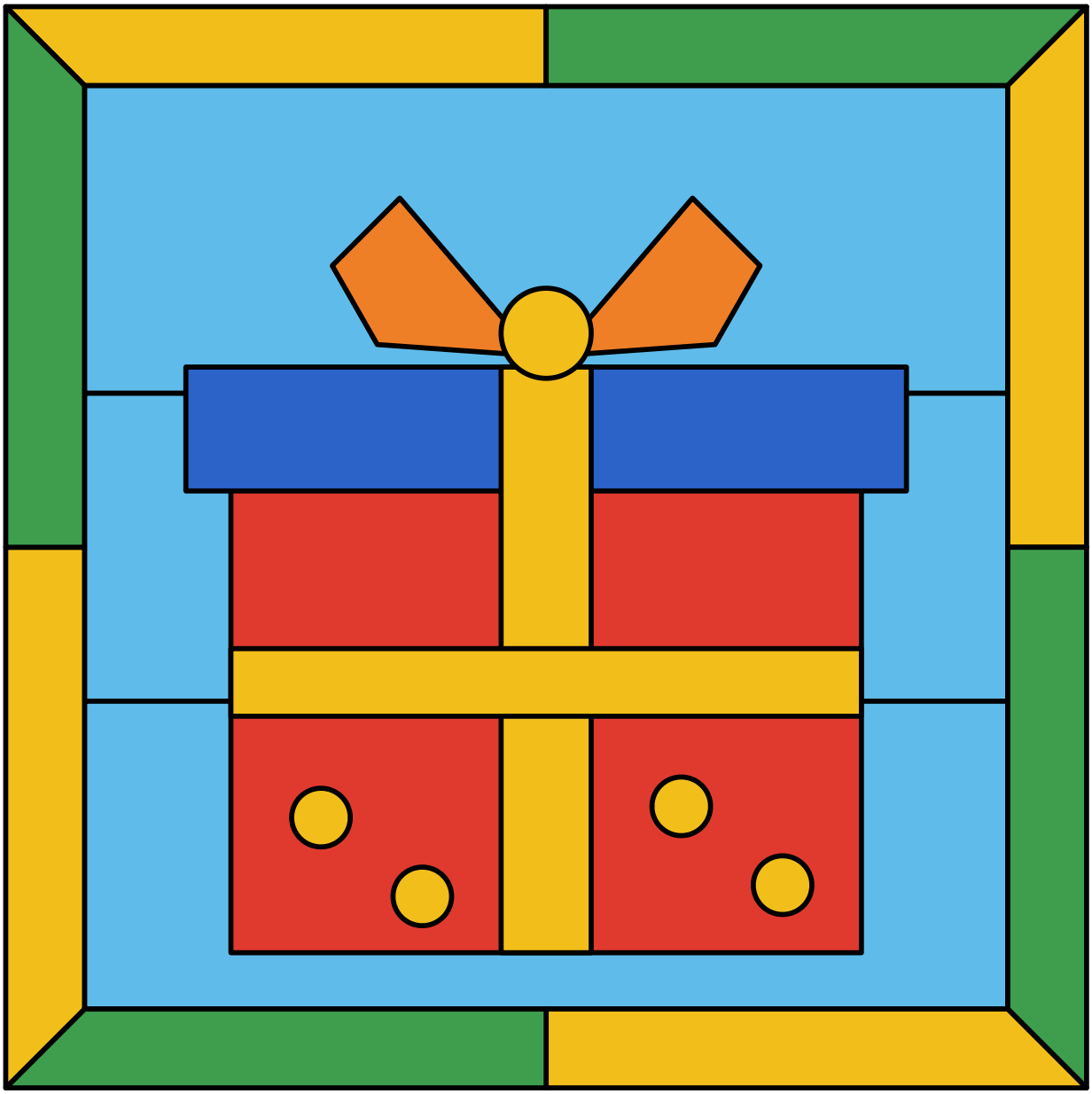

Maze answer

Level 3 Easy

Name _____ Date _____

The shortest way is 32 steps.

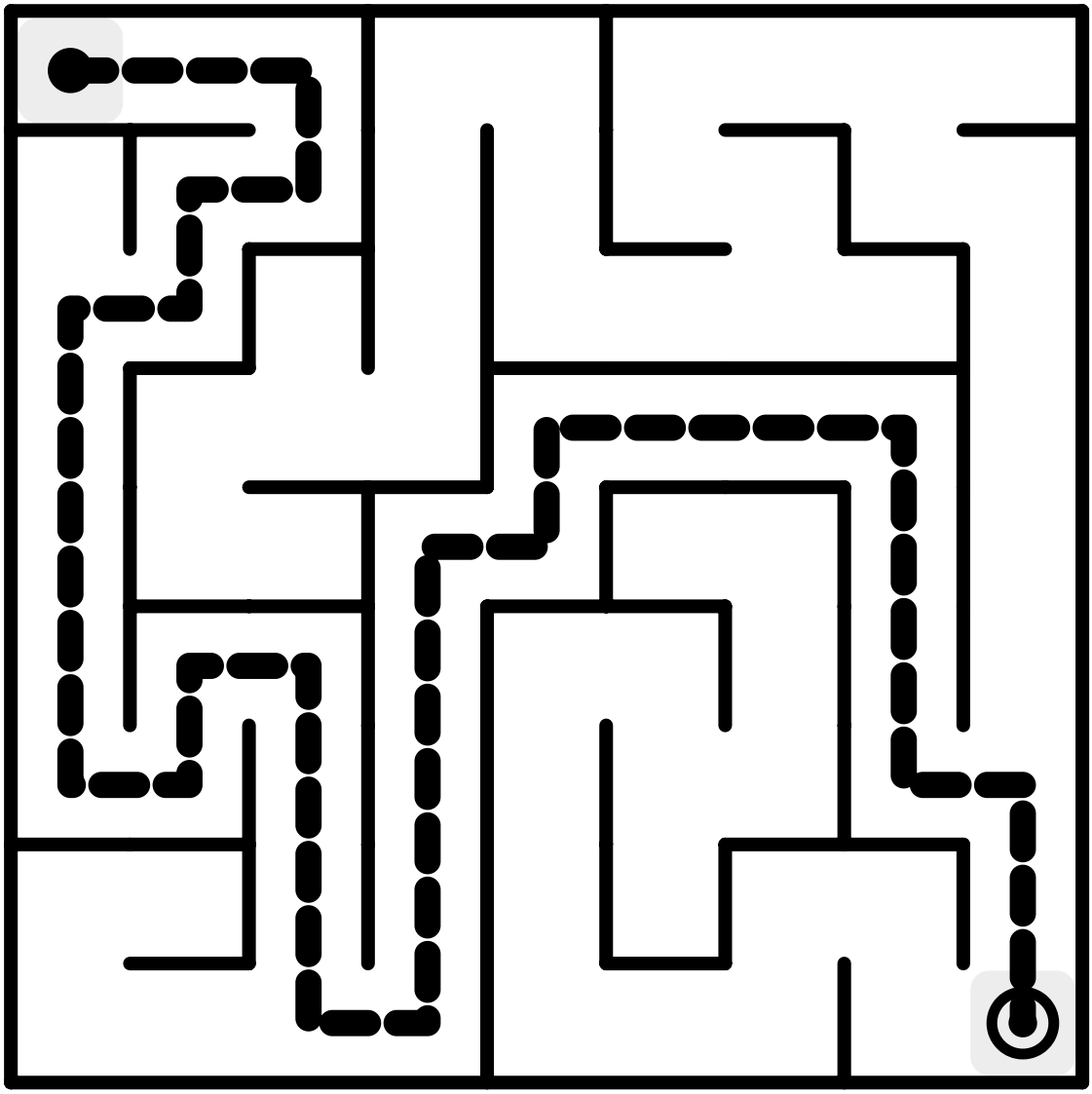

Finished example

Snowman

Name _____ Date _____

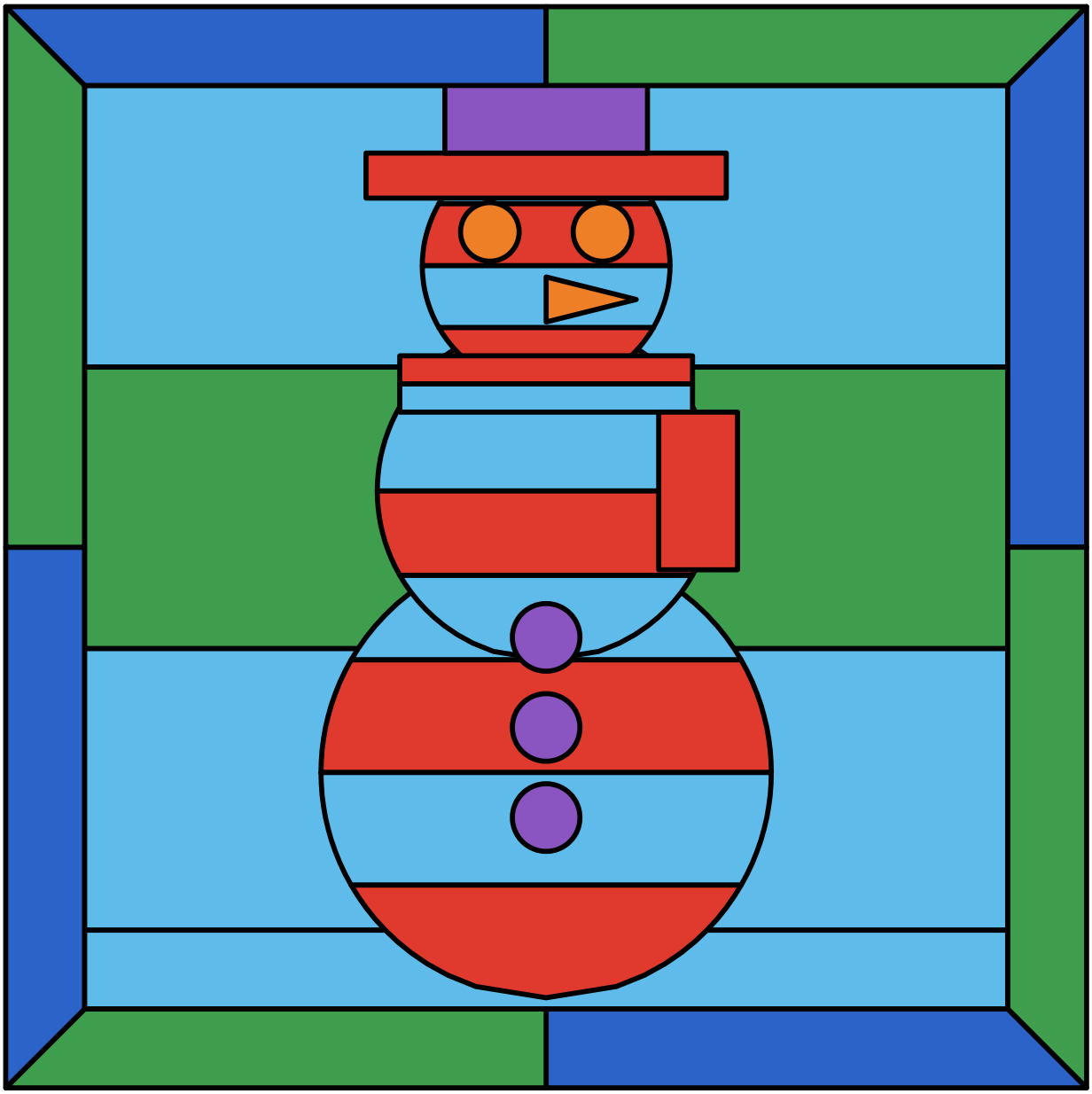

Word Search — answers

Theme Christmas

Name _____ Date _____

BOW | CAROL | SLEIGH | WREATH | STAR | ANGEL | STOCKING | GIFT

D	T	N	O	F	E	E	T	N	M
L	O	R	A	C	S	S	A	R	A
S	T	T	F	I	G	T	R	N	T
T	E	S	O	O	A	M	A	N	D
O	B	D	L	W	H	M	I	R	F
C	O	O	H	E	R	H	Y	L	G
K	A	D	W	E	I	E	E	D	L
I	L	Y	U	S	R	G	A	D	H
N	E	E	L	N	N	C	H	T	E
G	O	B	A	A	E	A	S	T	H

Sudoku — answers

Level 3 Easy

Name _____ Date _____

9	6	3	1	8	7	5	4	2
5	7	2	4	3	9	8	1	6
4	1	8	5	2	6	7	9	3
6	4	5	9	7	8	2	3	1
3	9	7	6	1	2	4	5	8
8	2	1	3	5	4	6	7	9
2	3	6	7	9	5	1	8	4
1	5	4	8	6	3	9	2	7
7	8	9	2	4	1	3	6	5

Finished example

Christmas Wreath

Name _____ Date _____

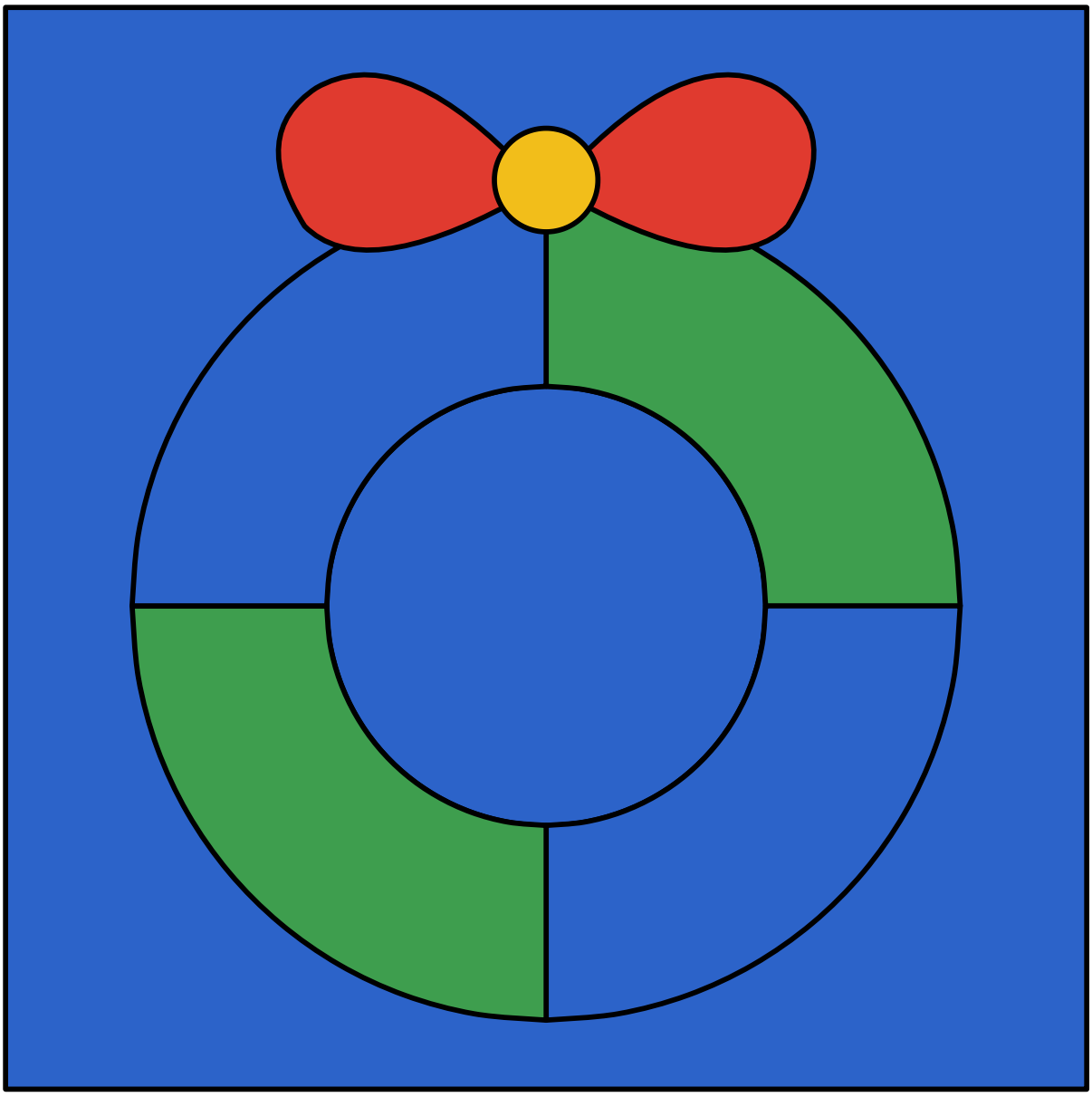

Finished example

Christmas Bells

Name _____ Date _____

